# Do You Know The Troubleshooting Of The Double Screw Feed Extruder?

**Twin screw feed extruder machine is a kind of Shandong Loyal puffed snack machinery. It is mainly used for food puffing, livestock and poultry feed or for puffing single raw material. This series of dry and wet extruder machine is suitable for large, medium and small feeding farms, feed factories and food factories.**

Twin screw feed extruder machine is a kind of Shandong Loyal puffed snack machinery. It is mainly used for food puffing, livestock and poultry feed or for puffing single raw material. This series of dry and wet extruder machine is suitable for large, medium and small feeding farms, feed factories and food factories. If the automatic twin screw extruder machine breaks down, what should we do? Now, Shandong Loyal will explain to you the troubleshooting of the double screw feed extruder:

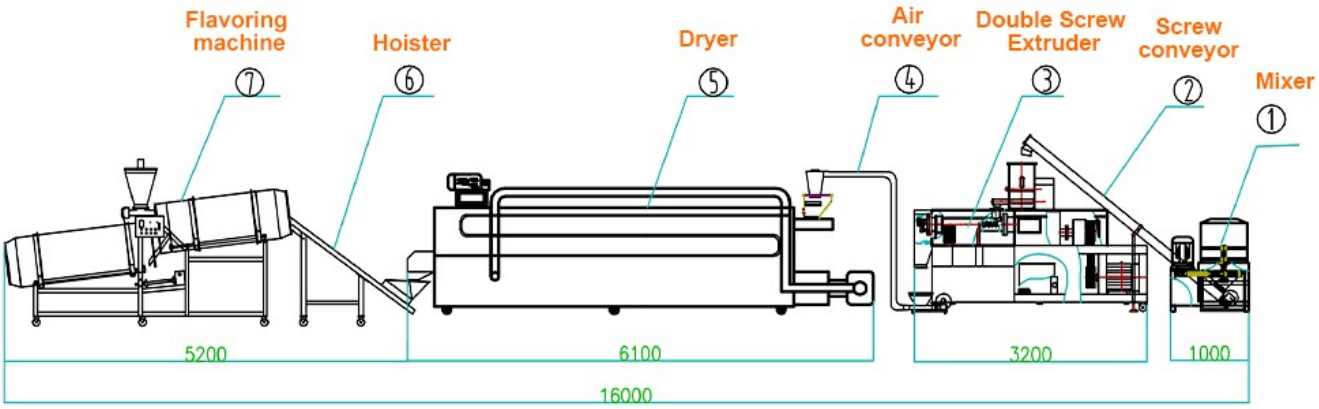


1. Strange noises appear in the body, the bearings are rotten, worn, and lack of oil. Maintenance method: disassemble the large belt pulley, and hammer out the main shaft forward or backward. Install the rear axle bearing first, fix the screws on the rear cover, and then install the front bearing. Replace the oil seal, add base lubricant, and do not add engine oil.

2. The twin double screw is generally able to produce about 100,000 kilograms. It will wear out, the output will decrease. And it will not expand. Solution: Replacement of new screw sleeve is more durable than propeller. In general, the new propeller is equipped with the old set, and the new set with the old shaft.

3. When the discharge hole is too large, the other hole should be replaced.

4. For other reasons, the discharge nut cannot be disassembled. The sleeve can be disassembled with a tool hook, clamped with a vise, and disassembled with oxygen heating.